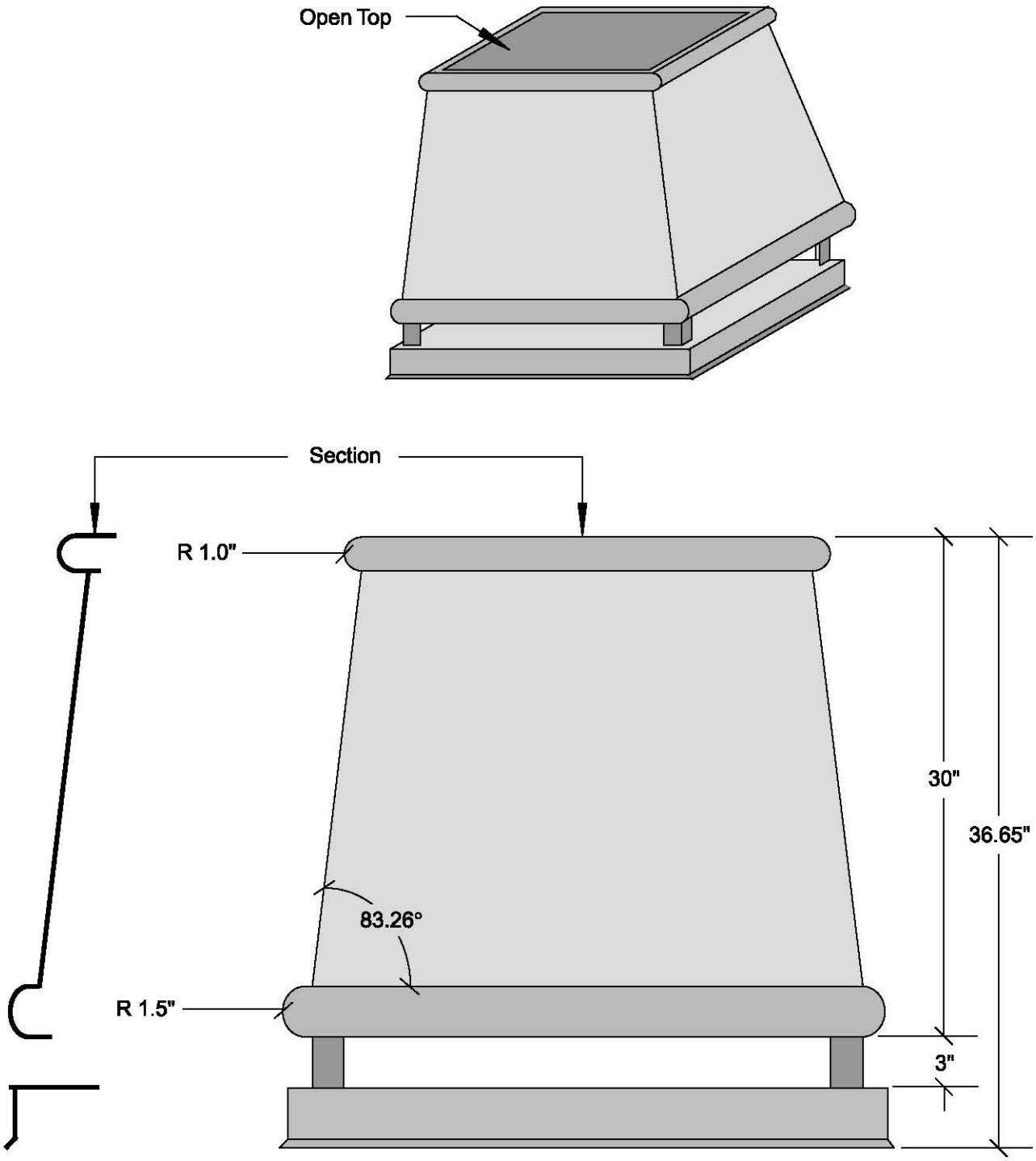
Open Top
Section
R 1.0"
30"
36.65"
83.26°
R 1.5"
3"