Plan View

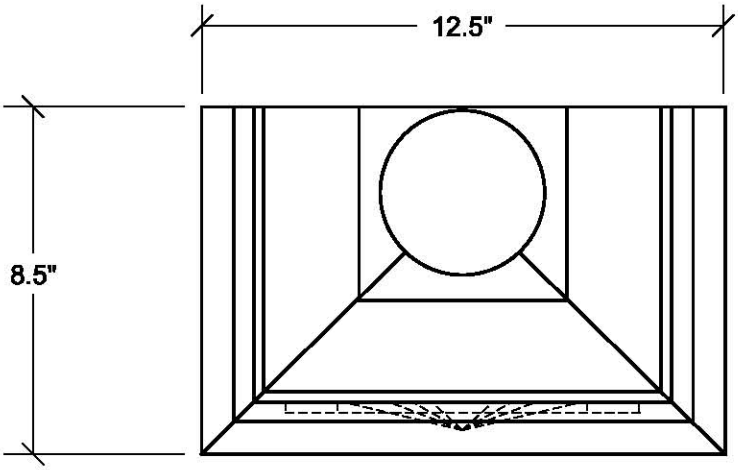

Side View

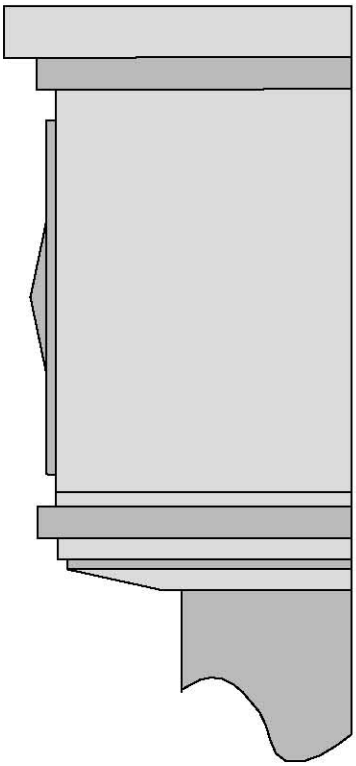
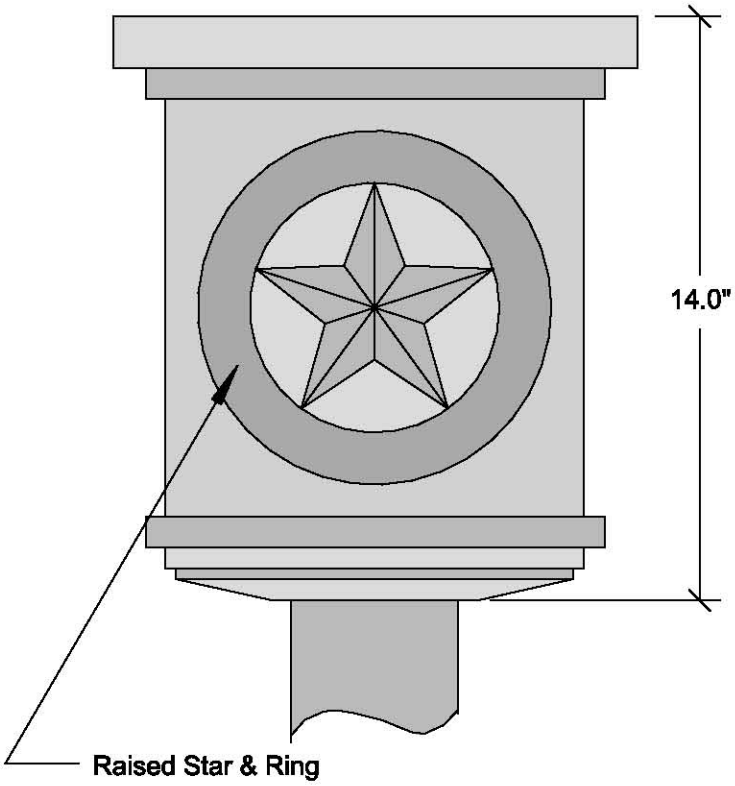
Front View