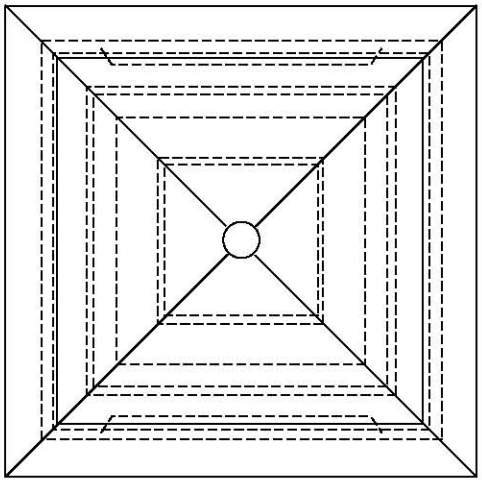

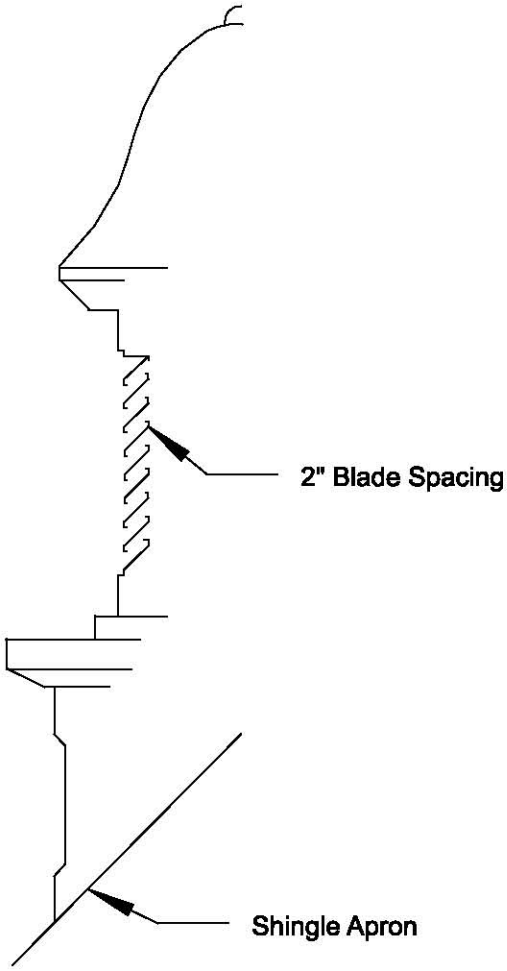
2" Blade Spacing
Shingle Apron

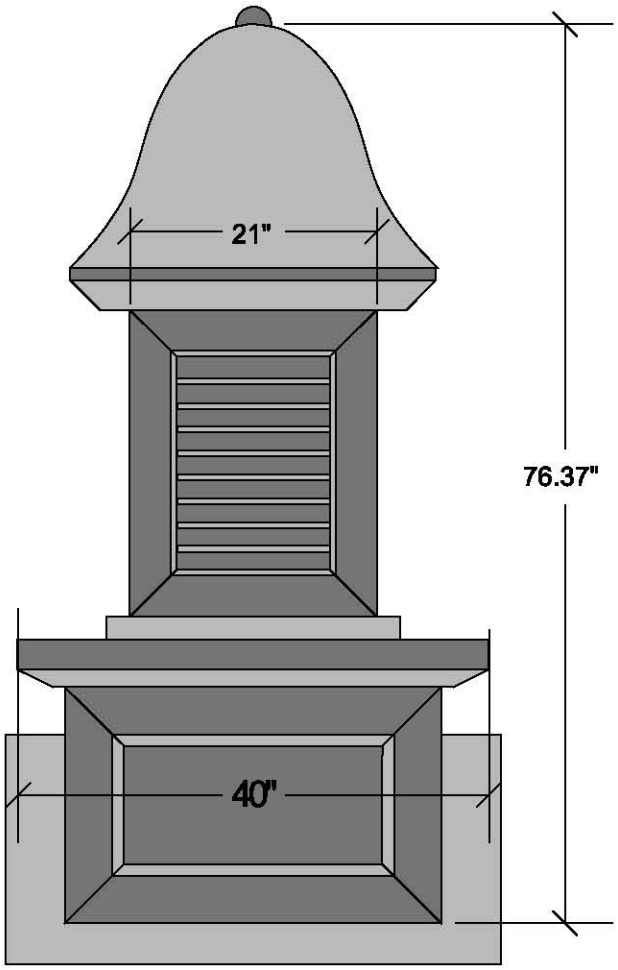
21"
76.37"
40"